Project: Control of Electromechanical System

The goal of this project assignment is to model and analyze the response of a system based on a specific DC motor. The device under development is designed to mix highly viscous fluids in a laboratory setting for biological sample testing, resembling a commonly known tool called a "milk frother" depicted in Figure 1.

Figure 1: Source [Amazon.ca].

The primary objective is to assess the performance of a design incorporating the specified motor. The system includes a small gear box (denoted as G), which connects the motor to the mixer shaft. The motor under evaluation is the EC-i 52 model, a brushless DC motor with a diameter of 52 mm and a power rating of 180 watts. The motor's technical specifications are provided in the attached datasheet (See last page). Figure 2 illustrates the basic system configuration, while Figure 3 provides a detailed schematic of the model components. Completion of this laboratory assignment requires the use of MATLAB.

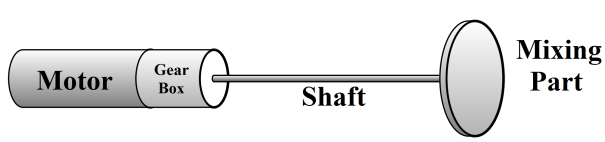

Figure 2: Designed product (system) configuration .

The following assumptions are to be made:

- The torsional stiffness of the shaft is negligible and can be disregarded.
- Only the rotational inertia of the motor and the mixing element is considered, while the inertias of the gears and shafts are ignored.
- During operation, the mixing element is submerged in a fluid and encounters a resistive torque, $\tau = b\omega$, where ω represents the angular velocity of the mixing element.
- The rotational moment of inertia of the mixing element is equivalent to that of a steel disk with a diameter of 3 cm and a thickness of 1 mm.

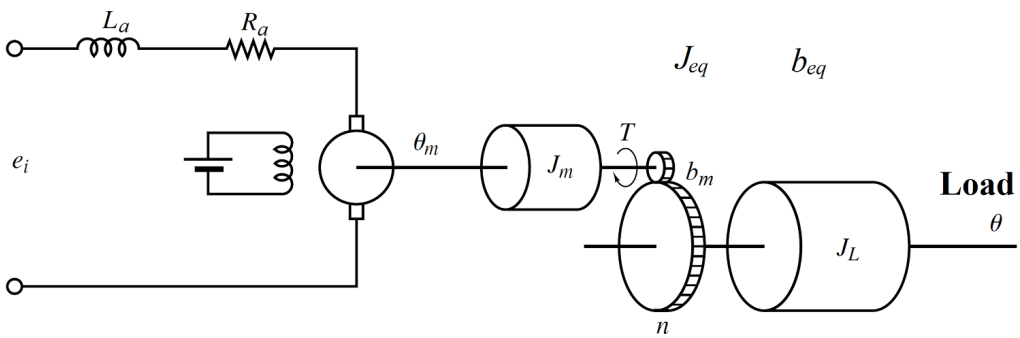

Figure 3: DC motor elements.

The motor's electrical behavior can be represented by the circuit depicted in Figure 3. The motor speed is governed by the speed constant, expressed as $\omega_m = K_\omega e_m$, while the motor torque is determined by the motor current, given by $\tau_m = K_T i_m$. All relevant motor parameters are provided in the specification sheet; attention should be given to the units of measurement to ensure consistency.

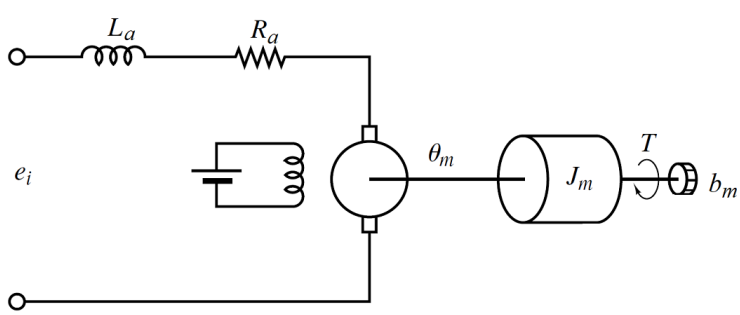

Figure 4: Electrical part of the DC motor.

Address the following questions, ensuring your submission includes all relevant plots and MATLAB script files used (*.m files):

1. (10%) Assuming the motor operates with 100% efficiency, use the relationship $e_m i_m = \tau_m \omega_m$ to derive a connection between K_T and K_ω. Verify these values against the motor specifications provided (unit conversions will be necessary). Do the specified values align with theoretical expectations? Provide commentary.

2. (10%) Select a gear ratio that ensures the mixer operates at 100 RPM when the motor runs at its nominal speed.

3. (10%) Using the determined gear ratio, calculate the maximum damping b that allows the motor to remain within its maximum continuous current. Additionally, determine the damping b_{stall} corresponding to the motor's stall torque.

4. (20%) Derive the transfer function that relates the input voltage to the angular velocity of the mixing element. Identify all parameter values in the transfer function.

5. (20%) Determine the poles and zeros of the transfer function. Classify the system type, compute its open-loop gain, and analyze the implications for the anticipated closed-loop performance. Repeat the analysis with b increased to 90% of b_{stall}. Compare and discuss the results.

6. (10%) Simulate the system's response to a **step input**, where the voltage increases from 0V to the nominal voltage. Provide commentary. Repeat the simulation with b increased to 90% of b_{stall}. Compare and discuss the findings.

7. (10%) Simulate the system's response to a **ramp input**, where the voltage increases linearly from 0V to the nominal voltage over 1 second. Provide commentary. Repeat the simulation with b increased to 90% of b_{stall}. Compare and discuss the observations.

8. (5%) If a rapid stop of the motor is required, discuss the implications of creating an open circuit versus a short circuit across the input terminals.

9. (5%) Evaluate whether this motor is suitable for the task. Discuss potential improvements or alternative motor choices that may enhance performance.

Some help:

- Motor manufacturers often use different conventions to describe their motors, which can lead to potential confusion. For example, Maxon specifies a speed constant with units of angular velocity per volt, often denoted as K_v (where v refers to velocity) or K_ω (where ω_m represents angular velocity). The notation K_v can be ambiguous since v might also refer to voltage. This relationship is expressed as

  $$\omega_m = K_\omega e_m$$

  Other manufacturers may describe the same relationship using a **back EMF constant** (K_b) or **voltage constant**, relating angular velocity and back EMF as:

  $$e_m = K_b \omega_m$$

  In some cases, K_v is also used to denote the voltage constant. Despite the differing notations, all these constants describe the same physical phenomenon: the relationship between voltage and angular velocity. However, the units can vary, and some constants are reciprocals of others, such as $K_b = \frac{1}{K_\omega}$. To avoid confusion, careful attention to units is essential, particularly when interpreting K_v to distinguish whether it represents a velocity constant or a voltage constant. In this context, the given speed constant is in units of rpm/volt, allowing the relationship $\omega_m = K_\omega e_m$ or equivalently $e_m = \frac{\omega_m}{K_\omega}$ to be established. While this type of ambiguity is less common with torque constants, checking the units can help resolve any uncertainties.

- By summing the voltage changes around the circuit, you should obtain:

  $$\begin{aligned} V_{in} &= R_m i + L_m \frac{di}{dt} + e_m \\ &= R_m i + L_m \frac{di}{dt} + \frac{\omega_m}{K_\omega} \\ &= R_m i + L_m \frac{di}{dt} + \frac{1}{K_\omega} \frac{d\theta_m}{dt} \end{aligned}$$

  You can visit [1] to read more about modeling of electromechanical systems and DC motor model.

References

[1] Ogata, Katsuhiko. “Modern control engineering.”, Pearson; 5th Edition, (2020).

EC-i

EC-i 52 ∅52 mm, brushless, 180 watt

High Torque

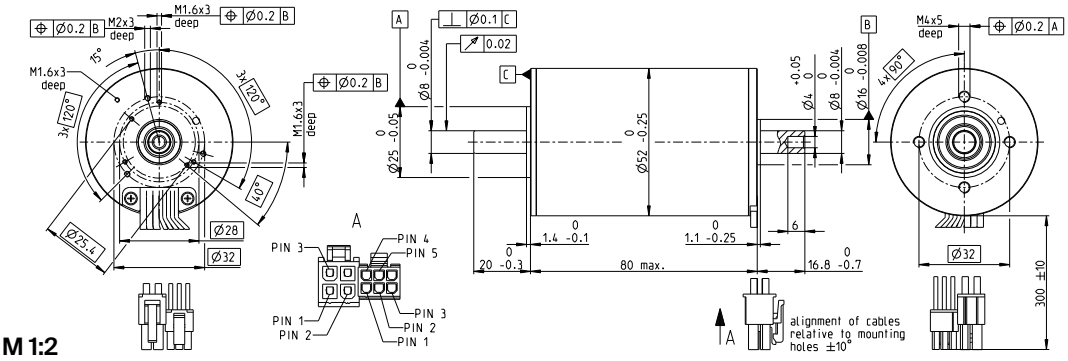

M 1:2

Stock program
Standard program
Special program (on request)

	Part Numbers			
with Hall sensors	574740	574741	579164	579165
Motor Data (provisional)				
Values at nominal voltage				
1 Nominal voltage (V)	18	24	36	48
2 No load speed (rpm)	4820	4680	4820	4900
3 No load current (mA)	1010	726	507	390
4 Nominal speed (rpm)	4360	4200	4360	4450
5 Nominal torque (max. continuous torque) (mNm)	388	428	438	412
6 Nominal current (max. continuous current) (A)	11.1	8.81	6.18	4.47
7 Stall torque[1] (mNm)	11500	13000	15900	15700
8 Stall current (A)	325	268	225	169
9 Max. efficiency (%)	89.3	90	90.8	90.7
Characteristics				
10 Terminal resistance phase to phase (Ω)	0.0555	0.0894	0.16	0.284
11 Terminal inductance phase to phase (mH)	0.0643	0.122	0.257	0.443
12 Torque constant (mNm/A)	35.3	48.6	70.6	92.7
13 Speed constant (rpm/V)	270	197	135	103
14 Speed/torque gradient (rpm/mNm)	0.425	0.362	0.306	0.316
15 Mechanical time constant (ms)	0.756	0.645	0.544	0.562
16 Rotor inertia (gcm²)	170	170	170	170

Specifications

Thermal data

17	Thermal resistance housing-ambient	4.32 K/W
18	Thermal resistance winding-housing	0.63 K/W
19	Thermal time constant winding	10.2 s
20	Thermal time constant motor	1780 s
21	Ambient temperature	-40...+100°C
22	Max. winding temperature	+155°C

Mechanical data (preloaded ball bearings)

23	Max. speed	6000 rpm
24	Axial play at axial load < 15 N	0 mm
	> 15 N	0.14 mm
25	Radial play	preloaded
26	Max. axial load (dynamic)	12 N
27	Max. force for press fits (static)	150 N
	(static, shaft supported)	6000 N
28	Max. radial load, 5 mm from flange	110 N

Other specifications

29	Number of pole pairs	8
30	Number of phases	3
31	Weight of motor	823 g

Values listed in the table are nominal.

Connection motor (Cable AWG 16)

red	Motor winding 1	Pin 1
black	Motor winding 2	Pin 2
white	Motor winding 3	Pin 3
	N.C.	Pin 4

Connector	**Article number**
Molex	39-01-2040

Connection sensor (Cable AWG 26)

yellow	Hall sensor 1	Pin 1
brown	Hall sensor 2	Pin 2
grey	Hall sensor 3	Pin 3
blue	GND	Pin 4
green	V_{Hall} 4.5...24 VDC	Pin 5
	N.C.	Pin 6

Connector	**Article number**
Molex	430-25-0600

Wiring diagram for Hall sensors see p. 59

[1]Calculation does not include saturation effect (p. 71/178)

Operating Range

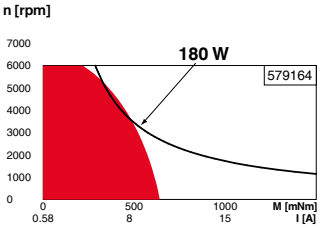

Comments

Continuous operation
In observation of above listed thermal resistance (lines 17 and 18) the maximum permissible winding temperature will be reached during continuous operation at 25°C ambient.
= Thermal limit.

Short term operation
The motor may be briefly overloaded (recurring).

Assigned power rating

maxon Modular System

Details on catalog page 42

Planetary Gearhead
∅52 mm
4 - 30 Nm
Page 411

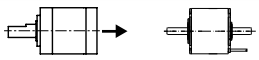

Recommended Electronics:

Notes	Page **42**
ESCON Mod. 50/8 (HE)	502
ESCON 70/10	503
EPOS4 Mod./Comp. 50/8	511
EPOS4 Mod./Comp. 50/15	511
EPOS4 70/15	515

Encoder 16 EASY/XT
128 - 1024 CPT, 3 channels
Page 465/467

Encoder 16 EASY Absolute/XT
4096 steps
Page 469/471

Encoder 16 RIO
1024 - 32 768 CPT, 3 channels
Page 482

Encoder AEDL 5810
1024 - 5000 CPT, 3 channels
Page 485

Encoder HEDL 5540
500 CPT, 3 channels
Page 492